Bootkits: Past, Present & Future

Eugene Rodionov
@vxradius

Alexander Matrosov
@matrosov

David Harley
@DavidHarleyBlog

vb 2014 SEATTLE
24 - 26 September 2014

Agenda

- Modern Bootkits History
  - ✓ Legacy BIOS vs. UEFI Boot Environment & Proof of Concept vs. In the Wild
  - ✓ Legacy BIOS Bootkit Classification
- UEFI Bootkits
  - ✓ Bootkit Implementation Strategies
- Attacks against Secure Boot
- Forensic Software
  - ✓ HiddenFsReader
  - ✓ CHIPSEC

Modern Bootkit History

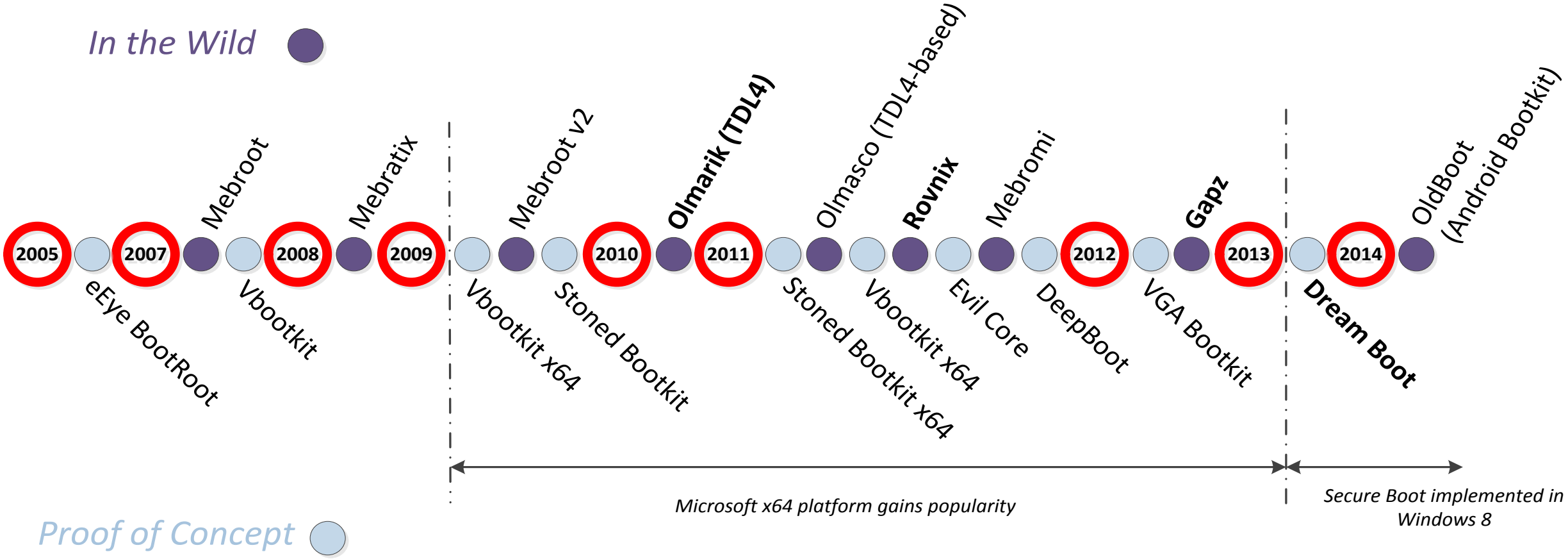

Legacy BIOS vs. UEFI

- No more MBR and VBR/IPL code
- Different hard drive partitioning scheme: GPT (GUID Partition Table)
- Secure Boot technology is implemented in Windows 8

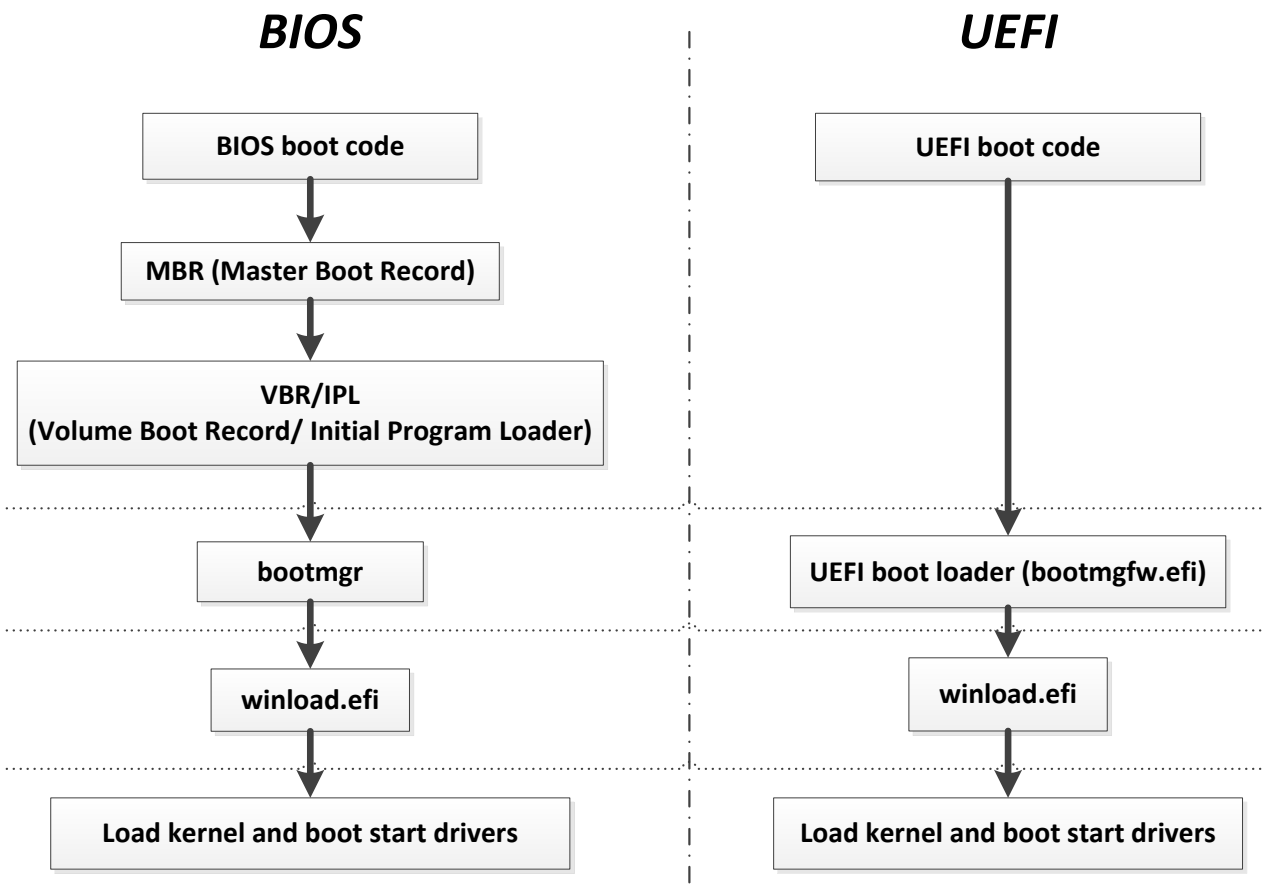

The Target of Modern Bootkits (MBR/VBR)

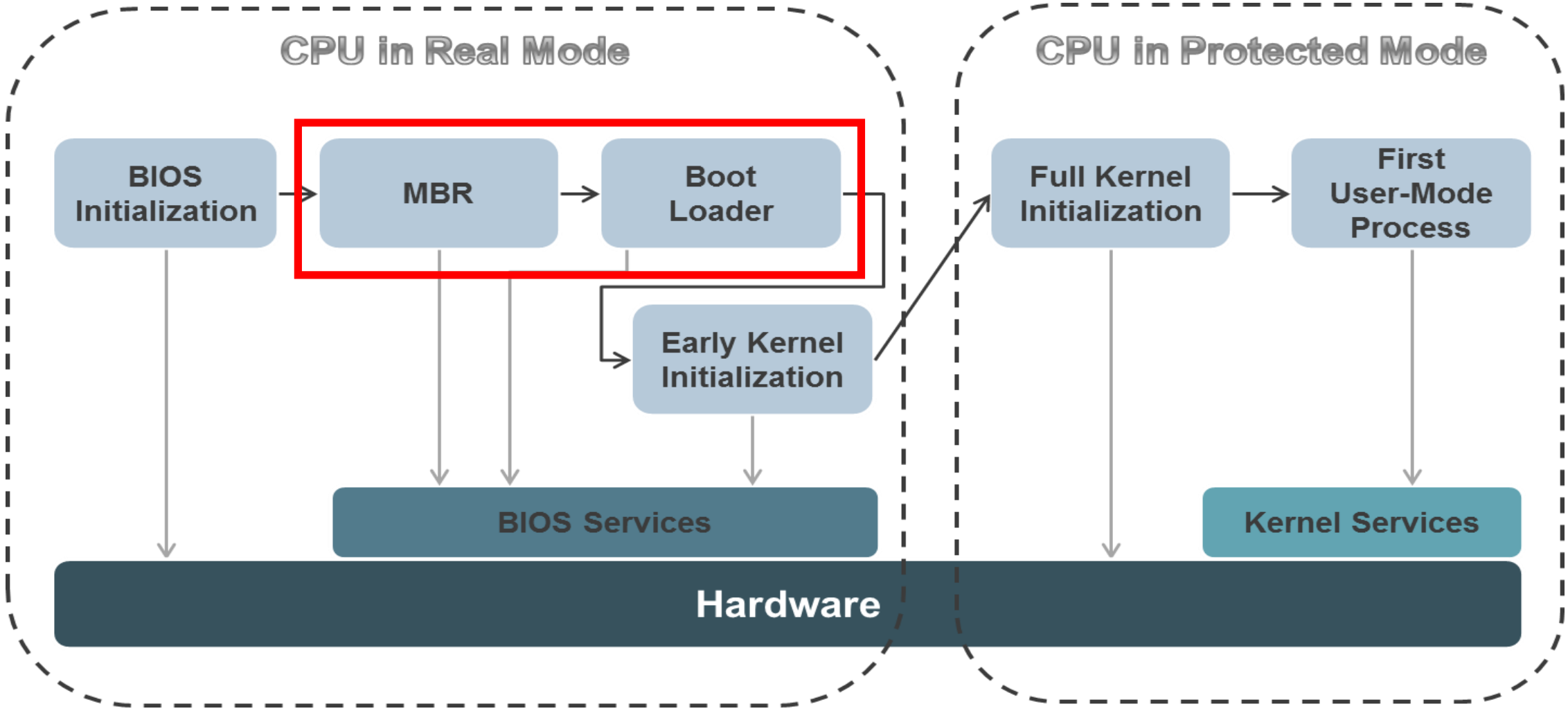

Classification of MBR/VBR Bootkits

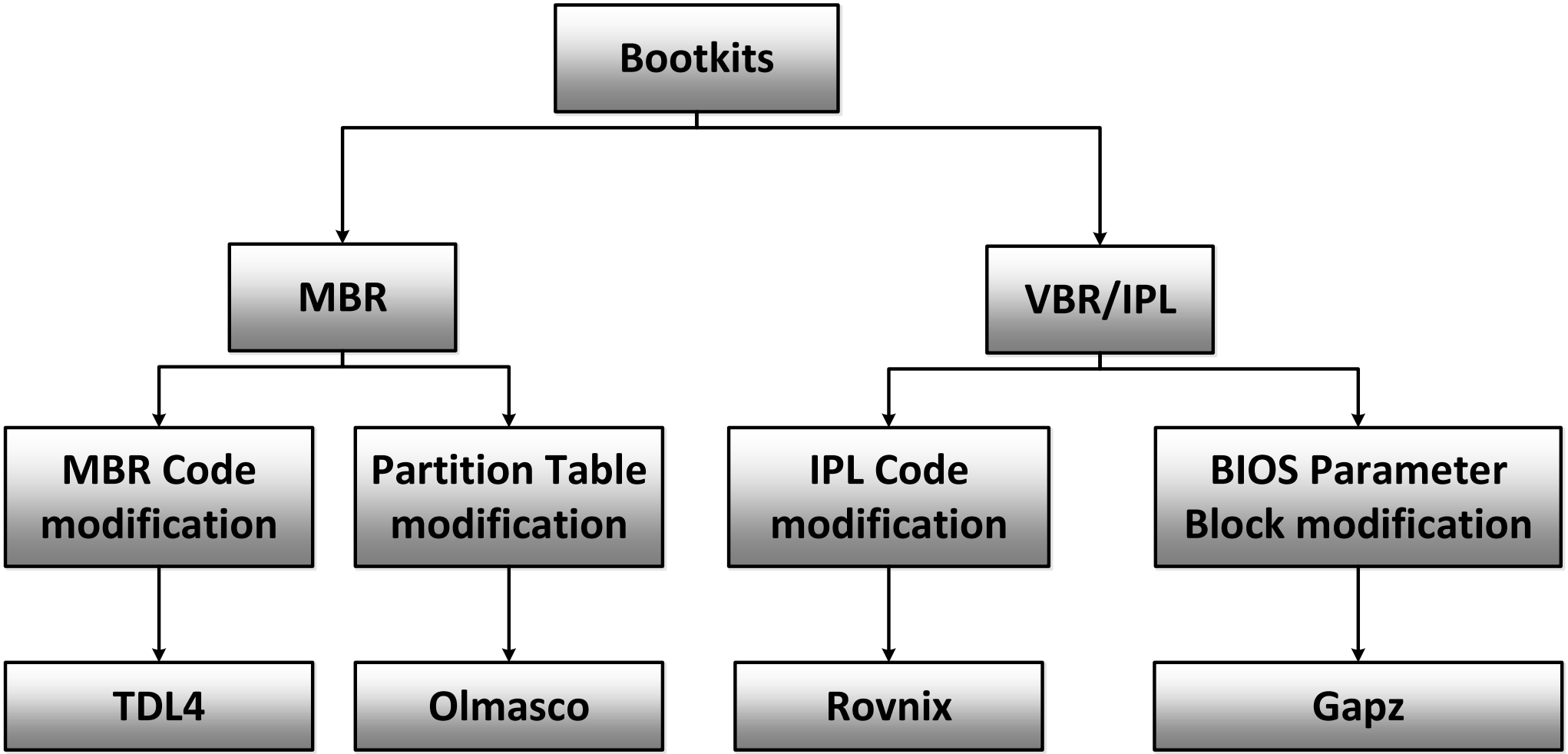

IPL Code Modification: Rovnix

- Win64/Rovnix overwrites bootstrap code of the active partition

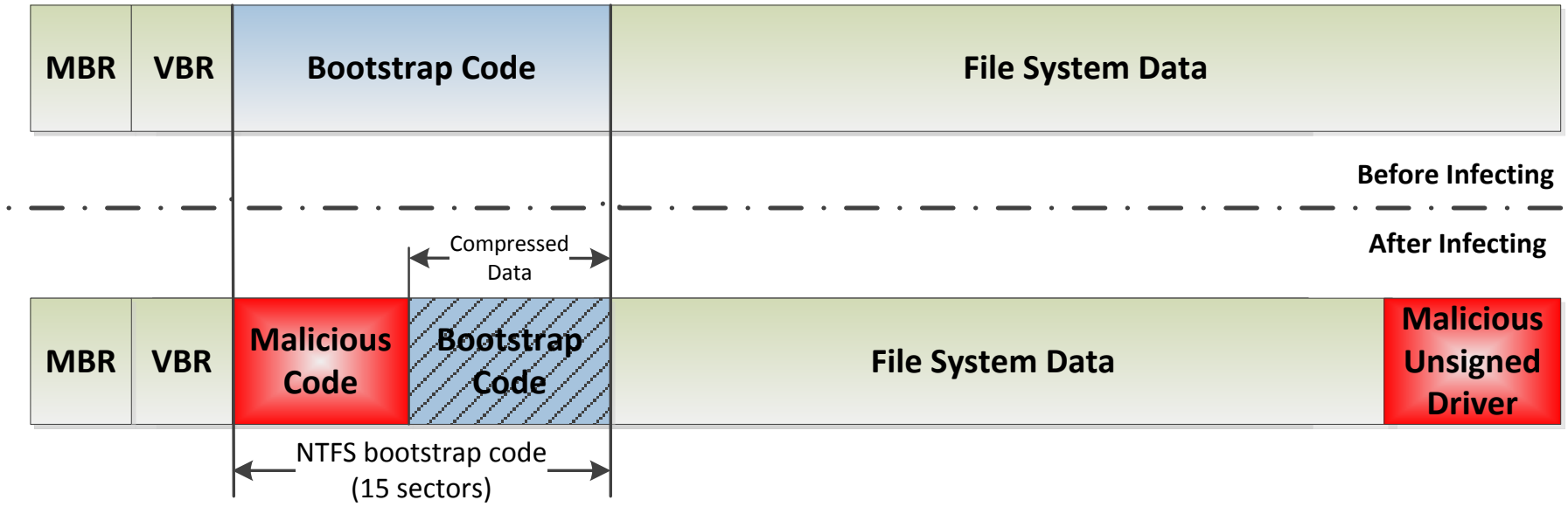

"Hasta La Vista, Bootkit: Exploiting the VBR"
http://www.welivesecurity.com/2011/08/23/hasta-la-vista-bootkit-exploiting-the-vbr/

Gapz VBR Bootkit

Main features:

- Relies on Microsoft Windows VBR layout
- The infections result in modifying only 4 bytes of VBR
- The patched bytes might differ on various installations

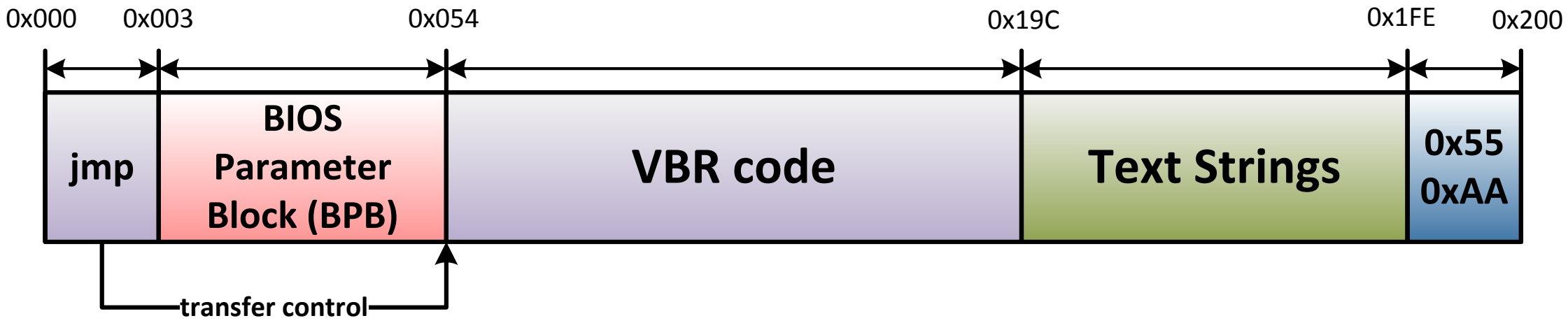

"Mind the Gapz: The most complex bootkit ever analyzed?"
http://www.welivesecurity.com/wp-content/uploads/2013/04/gapz-bootkit-whitepaper.pdf

Gapz BPB Layout

```
00000000:  EB 52 90 4E-54 46 53 20-20 20 20 00-02 08 00 00
00000010:  00 00 00 00-00 F8 00 00-3F 00 FF 00-00 08 00 00
00000020:  00 00 00 00-80 00 80 00-FF 1F 03 00-00 00 00 00
00000030:  55 21 00 00-00 00 00 00-02 00 00 00-00 00 00 00
00000040:  F6 00 00 00-01 00 00 00-E6 94 34 C6-AD 34 C6 50
00000050:  00 00 00 00-FA 33 C0 8E-D0 BC 00 7C-FB 68 C0 07
00000060:  1F 1E 68 66-00 CB 88 16-0E 00 66 81-3E 03 00 4E
00000070:  54 46 53 75-15 B4 41 BB-AA 55 CD 13-72 0C 81 FB
00000080:  55 AA 75 06-F7 C1 01 00-75 03 E9 DD-00 1E 83 EC
00000090:  18 68 1A 00-B4 48 8A 16-0E 00 8B F4-16 1F CD 13
000000A0:  9F 83 C4 18-9E 58 1F 72-E1 3B 06 0B-00 75 DB A3
000000B0:  0F 00 C1 2E-0F 00 04 1E-5A 33 DB B9-00 20 2B C8
000000C0:  66 FF 06 11-00 03 16 0F-00 8E C2 FF-06 16 00 E8
000000D0:  4B 00 2B C8-77 EF B8 00-BB CD 1A 66-23 C0 75 2D
000000E0:  66 81 FB 54-43 50 41 75-24 81 F9 02-01 72 1E 16
000000F0:  68 07 BB 16-68 70 0E 16-68 09 00 66-53 66 53 66
00000100:  55 16 16 16-68 B8 01 66-61 0E 07 CD-1A 33 C0 BF
00000110:  28 10 B9 D8-0F FC F3 AA-E9 5F 01 90-90 66 60 1E
00000120:  06 66 A1 11-00 66 03 06-1C 00 1E 66-68 00 00 00
00000130:  00 66 50 06-53 68 01 00-68 10 00 B4-42 8A 16 0E
00000140:  00 16 1F 8B-F4 CD 13 66-59 5B 5A 66-59 66 59 1F
00000150:  0F 82 16 00-66 FF 06 11-00 03 16 0F-00 8E C2 FF
00000160:  0E 16 00 75-BC 07 1F 66-61 C3 A0 F8-01 E8 09 00
00000170:  A0 FB 01 E8-03 00 F4 EB-FD B4 01 8B-F0 AC 3C 00
00000180:  74 09 B4 0E-BB 07 00 CD-10 EB F2 C3-0D 0A 41 20
00000190:  64 69 73 6B-20 72 65 61-64 20 65 72-72 6F 72 20
000001A0:  6F 63 63 75-72 72 65 64-00 0D 0A 42-4F 4F 54 4D
000001B0:  47 52 20 69-73 20 6D 69-73 73 69 6E-67 00 0D 0A
000001C0:  42 4F 4F 54-4D 47 52 20-69 73 20 63-6F 6D 70 72
000001D0:  65 73 73 65-64 00 0D 0A-50 72 65 73-73 20 43 74
000001E0:  72 6C 2B 41-6C 74 2B 44-65 6C 20 74-6F 20 72 65
000001F0:  73 74 61 72-74 0D 0A 00-8C A9 BE D6-00 00 55 AA
00000200:  07 00 42 00-4F 00 4F 00-54 00 4D 00-47 00 52 00
00000210:  04 00 24 00-49 00 33 00-30 00 00 D4-00 00 00 24
```

HiddenSectors field of BPB

VBR of the active partition

Gapz

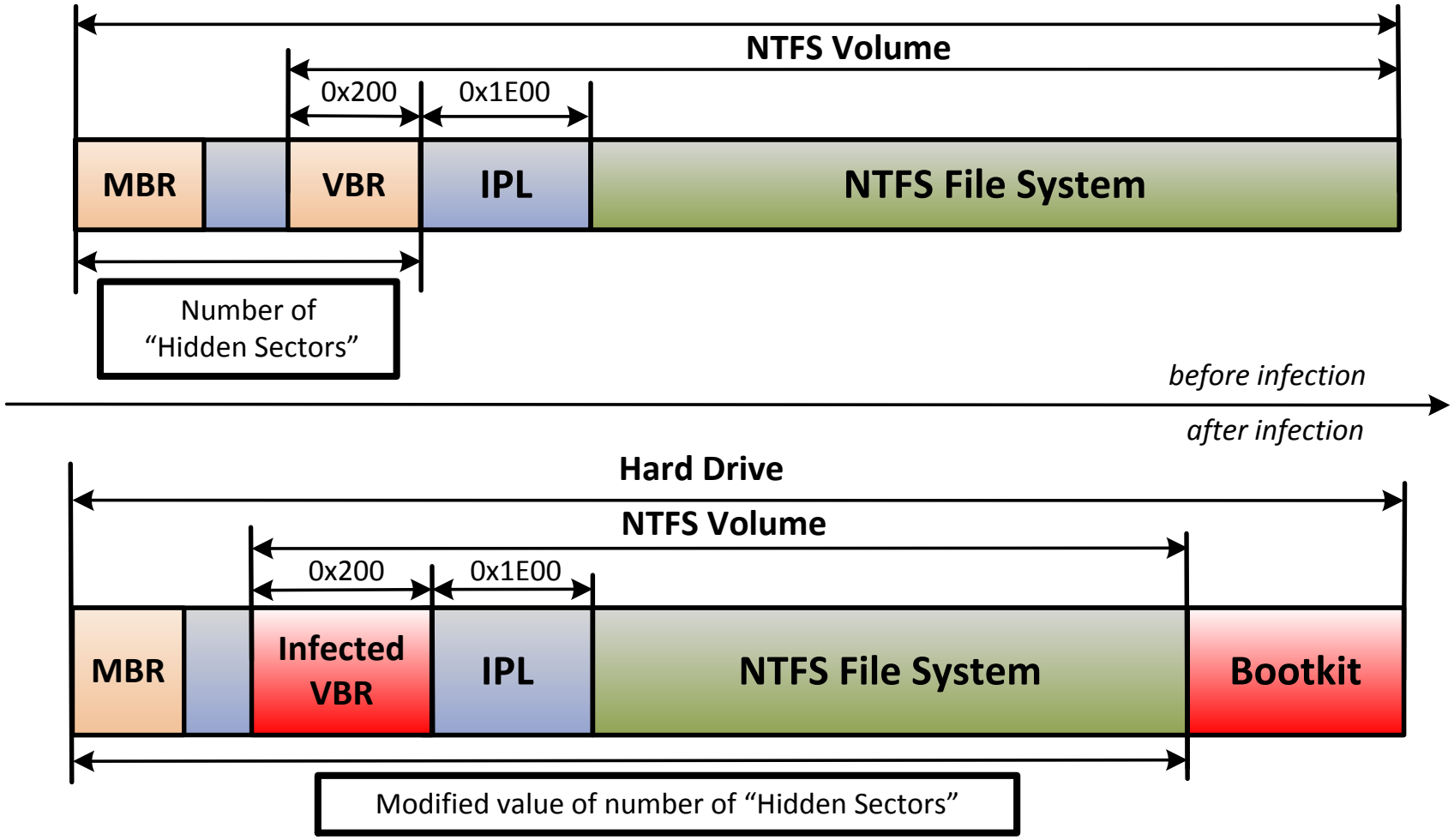
NTFS Volume
0x200
0x1E00
MBR
VBR
IPL
NTFS File System
Number of
“Hidden Sectors”
before infection
after infection
Hard Drive
NTFS Volume
0x200
0x1E00
MBR
Infected
VBR
IPL
NTFS File System
Bootkit
Modified value of number of “Hidden Sectors”

Functionality	Gapz	Olmarik (TDL4)	Rovnix (Cidox)	Goblin (XPAJ)	Olmasco (MaxSS)
MBR modification	☑	☑	☒	☑	☑
VBR modification	☑	☒	☑	☒	☒
Hidden file system type	FAT32	custom	FAT16 modification	custom (TDL4 based)	custom
Crypto implementation	AES-256, RC4, MD5, SHA1, ECC	XOR/RC4	Custom (XOR+ROL)	☒	RC6 modification
Compression algorithm	☑	☒	aPlib	aPlib	☒
Custom TCP/IP network stack implementation	☑	☒	☑	☒	☒

HiddenFsReader as a Forensic Tool (MBR/VBR)

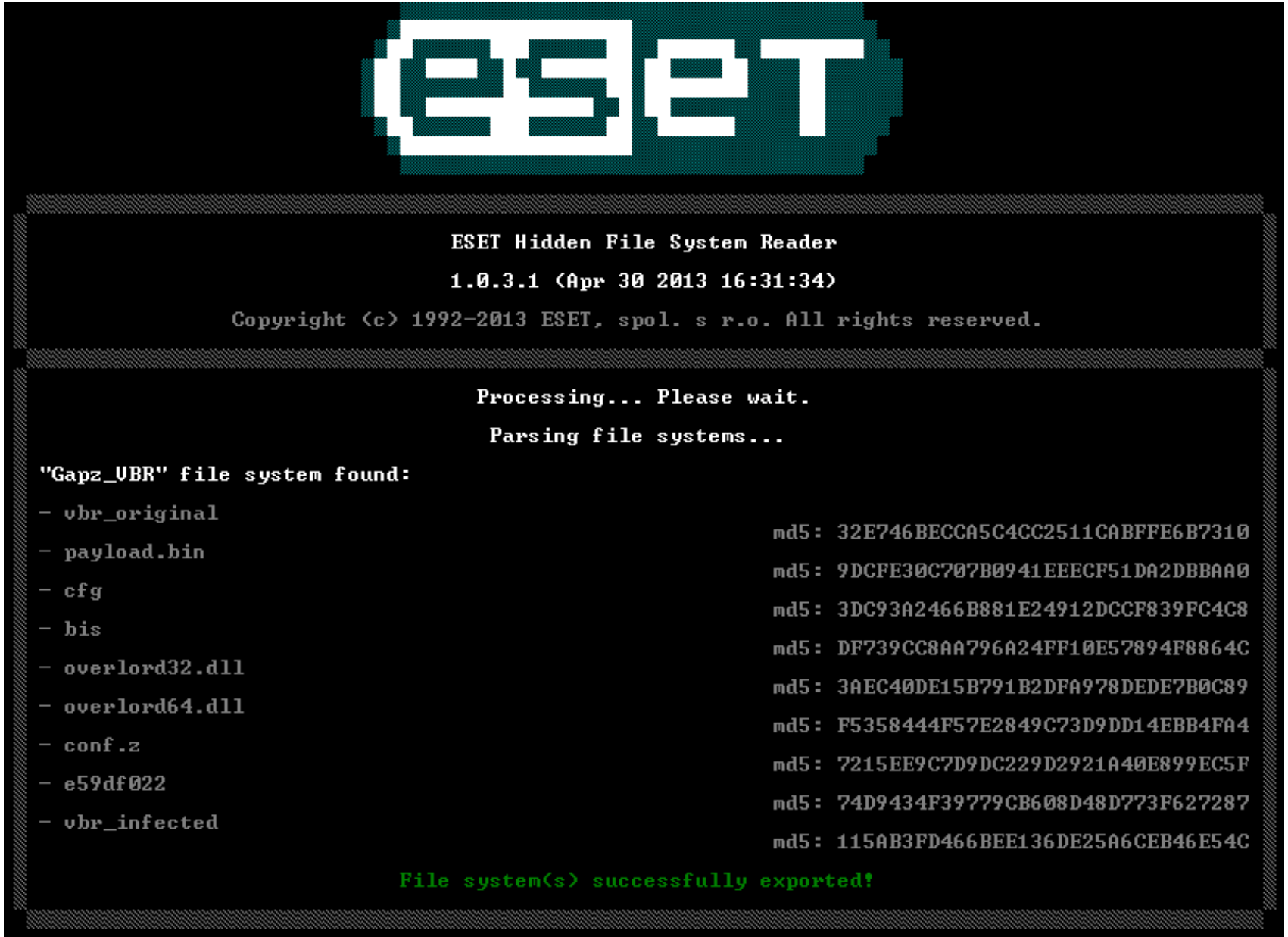

HiddenFsReader as a Forensic Tool (MBR/VBR)

```
                    ESET Hidden File System Reader

                    1.0.3.1 (Apr 30 2013 16:31:34)

        Copyright (c) 1992-2013 ESET, spol. s r.o. All rights reserved.

HfsReader.exe [params] [export_path]

Params:
/help or /?     - print help message
/no-output      - no output to command line
/no-export      - do not export files from file system(s)
/export-txt     - export file list from file system(s) to text file
/mbr            - make mbr dump
/vbr            - make active drive vbr dump
/dump=<o>,<s>   - make hard drive dump
                  <o> - offset from beginning or "end"
                  <s> - size
                  Examples:
                            /dump=512,1024
                            /dump=end,4096
/zip            - pack all files into zip archive
/full           - create full analysis and pack results into zip archive

Supported Hidden File Systems:

Win32/Olmarik (TDL3/TDL3+/TDL4)
Win32/Olmasco (MaxXSS)
Win32/Sirefef (ZeroAccess)
Win32/Rovnix
Win32/Xpaj
Win32/Gapz
Win32/Flamer
Win32/Urelas (GBPBoot)
```


Boot Priority
UEFI
Then World Moved to UEFI..

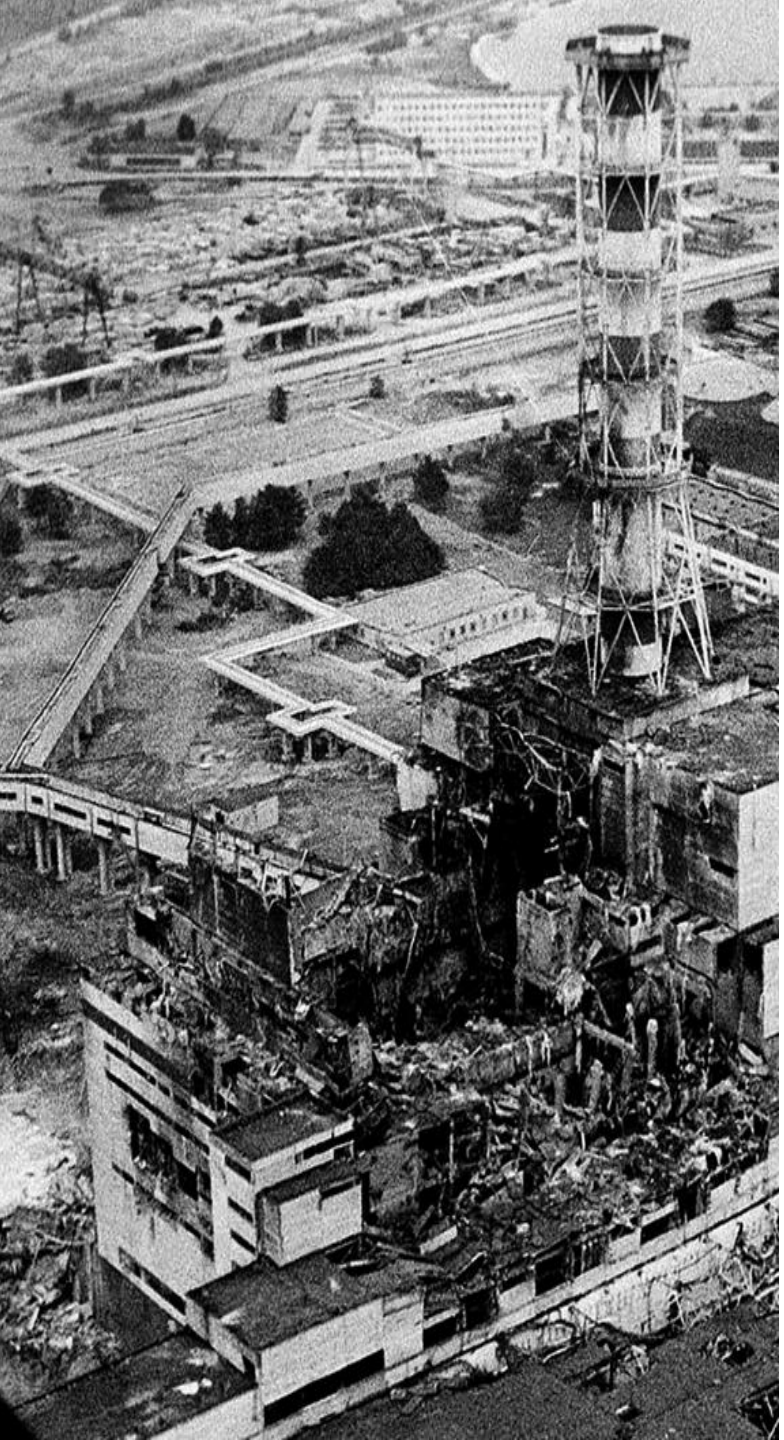

In The Beginning…

In 1998-99 **CIH** (Chernobyl) **virus** written by a student of Taipei Tatung Institute of Technology in Taiwan infected **~60 million** PCs

CIH (Chernobyl) **erased BIOS 'ROM'** boot block and boot sectors on a hard drive causing **~1B US dollars** in damage

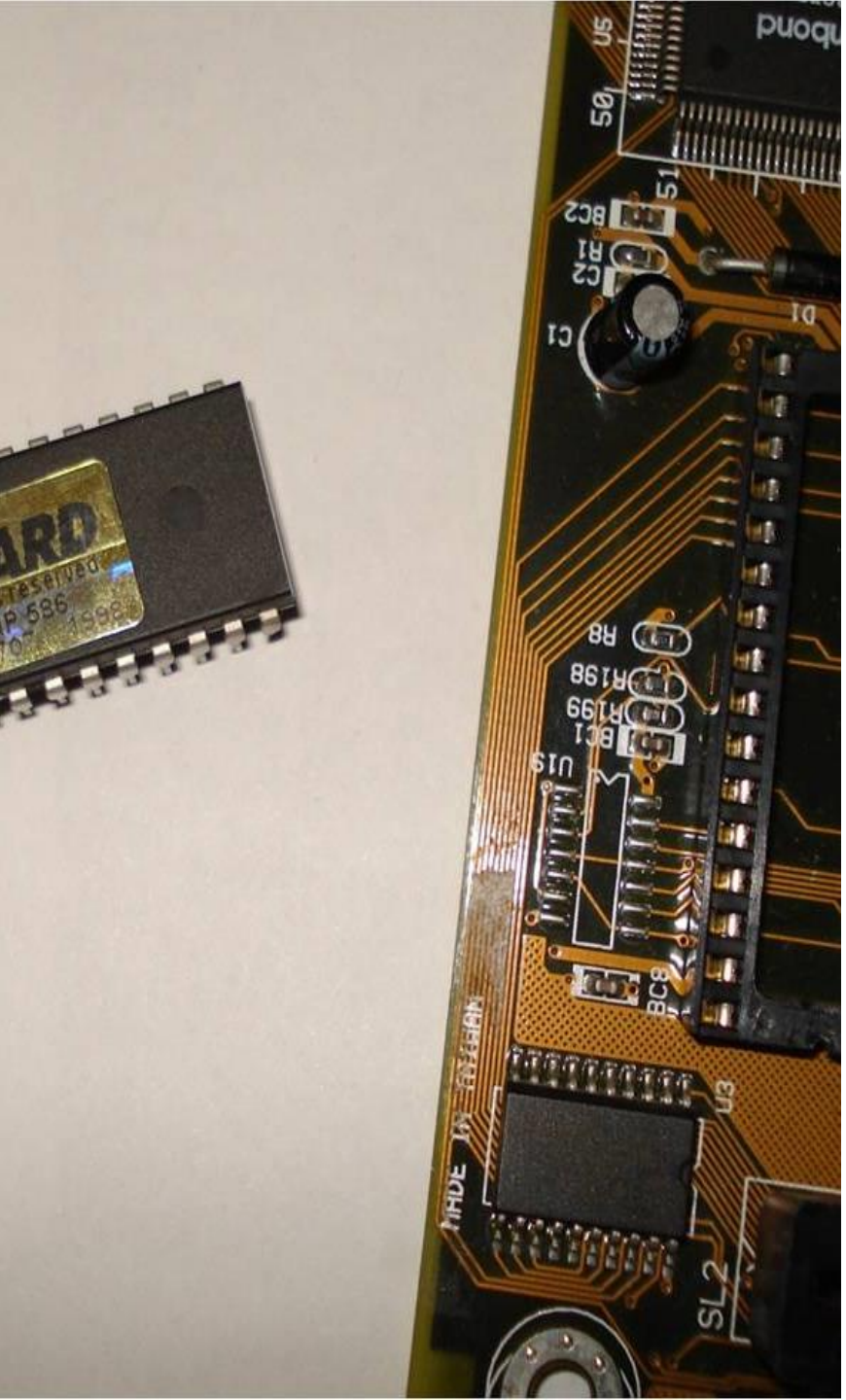

Signed BIOS Updates Are Rare

- **Mebromi** malware includes BIOS infector & MBR bootkit components
- Patches BIOS ROM binary injecting malicious ISA Option ROM with legitimate BIOS image mod utility
- Triggers SW SMI 0x29/0x2F to erase SPI flash then write patched BIOS binary

No Signature Checks of OS boot loaders (MBR/VBR)

- No concept of Secure or Verified Boot
- Wonder why **TDL4** and likes flourished?

UEFI BIOS Firmware

CPU Reset

SEC

S-CRTM; Init caches/MTRRs; Cache-as-RAM (NEM); Recovery; TPM Init

Pre-EFI Init (PEI)

S-CRTM: Measure DXE/BDS
Early CPU/PCH Init
Memory (DIMMs, DRAM) Init, SMM Init

ACPI, UEFI SystemTable, SMBIOS table

Driver Exec Env (DXE)

Continue initialization of platform & devices
Enum FV, dispatch drivers (network, I/O, service..)
Produce Boot and Runtime Services

ExitBootServices. Minimal UEFI services (Variable)

Boot Dev Select (BDS)

Boot Manager (Select Boot Device)
EFI Shell/Apps; OS Boot Loader(s)

Runtime / OS

UEFI Bootkits

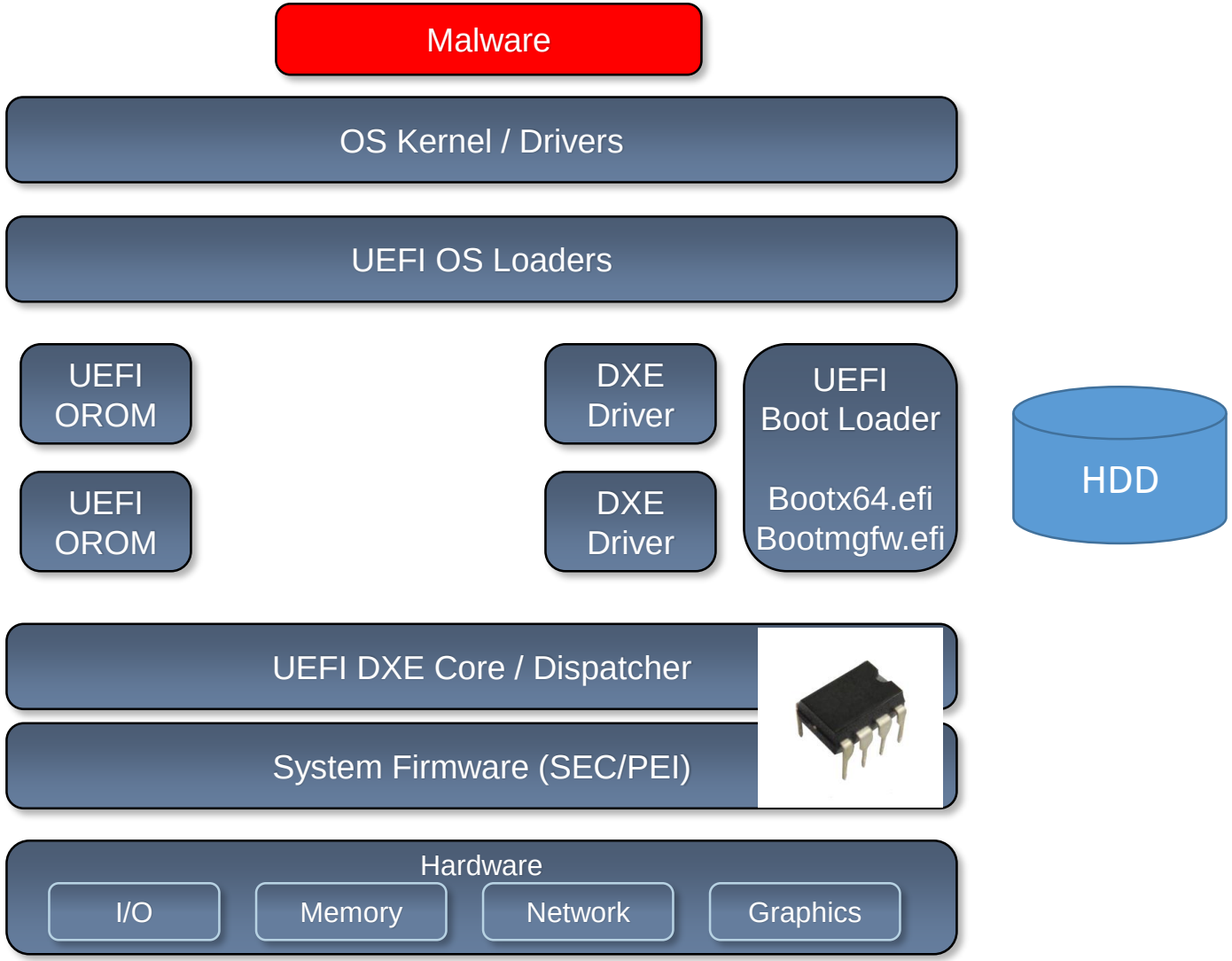

UEFI Bootkits

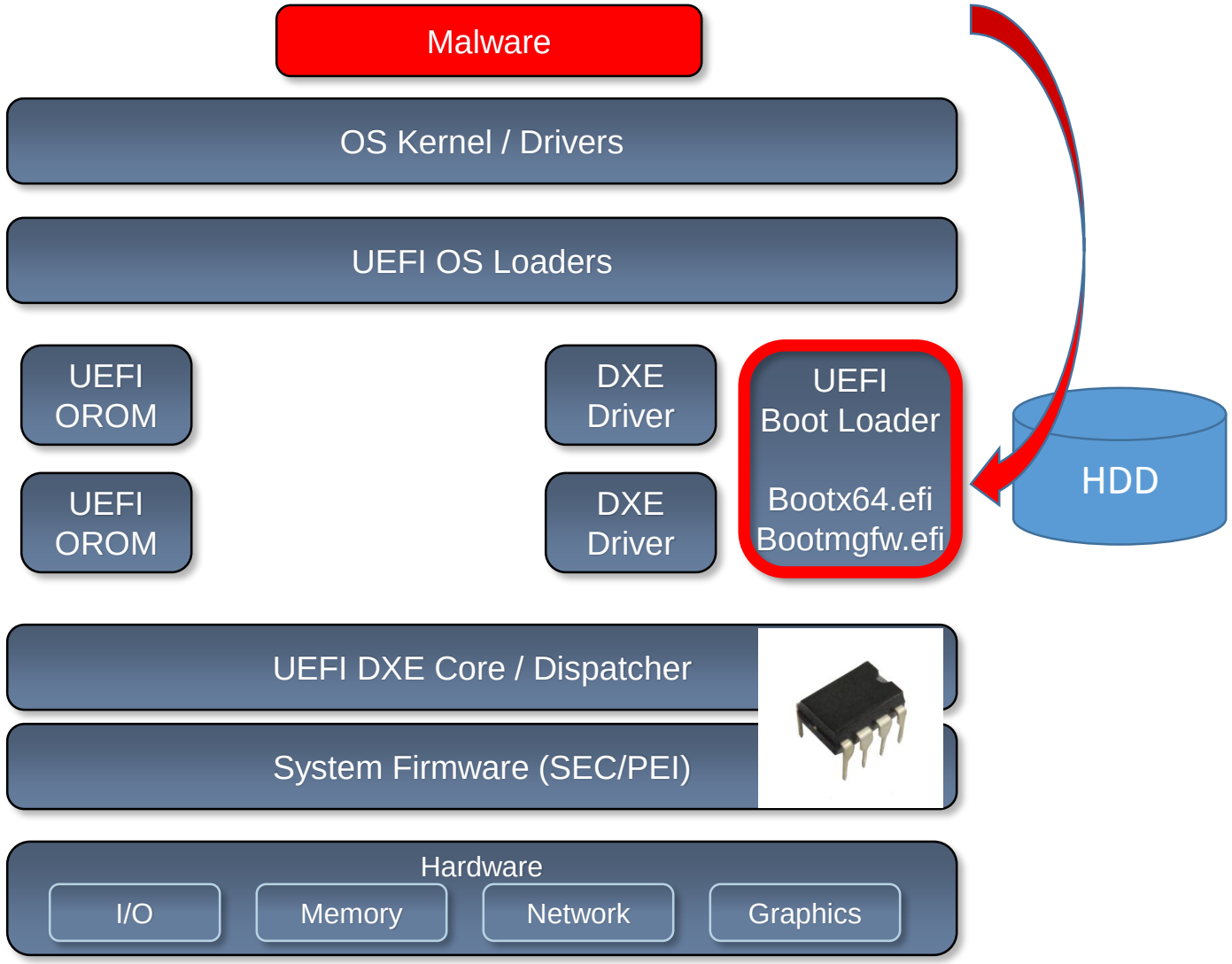

UEFI Bootkits

Replacing Windows Boot Manager

EFI System Partition (ESP) on Fixed Drive

ESP\EFI\Microsoft\Boot\bootmgfw.efi

UEFI technology: say hello to the Windows 8 bootkit! by ITSEC

Replacing Fallback Boot Loader

ESP\EFI\Boot\bootx64.efi

UEFI and Dreamboot by Sébastien Kaczmarek, QUARKSLAB

Adding New Boot Loader (bootkit.efi)

Modified BootOrder / Boot#### EFI variables

UEFI Bootkits

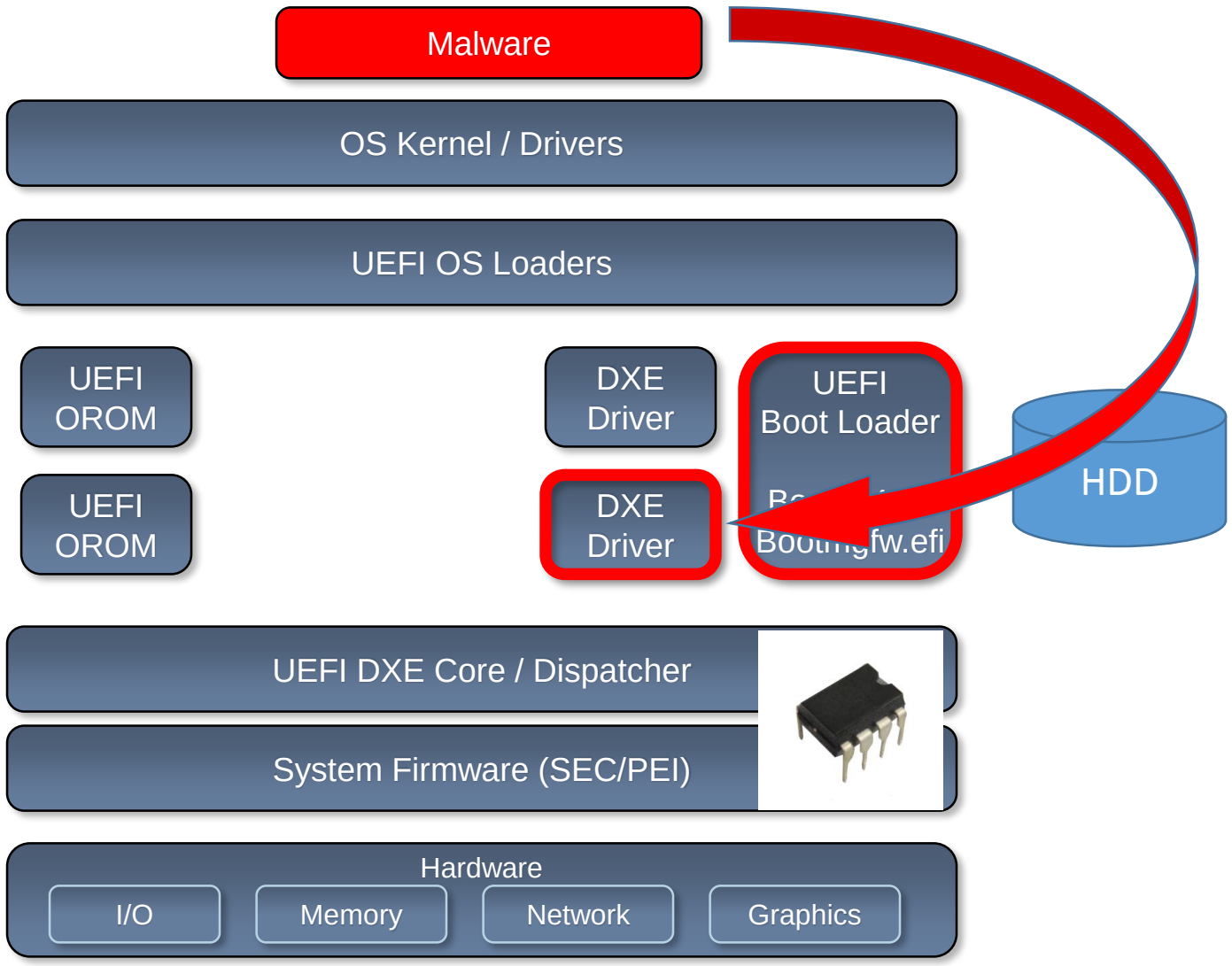

UEFI Bootkits

Adding/Replacing DXE Driver

- Stored on Fixed Drive
- Not embedded in Firmware Volume (FV) in ROM
- Modified DriverOrder + Driver#### EFI variables

UEFI Bootkits

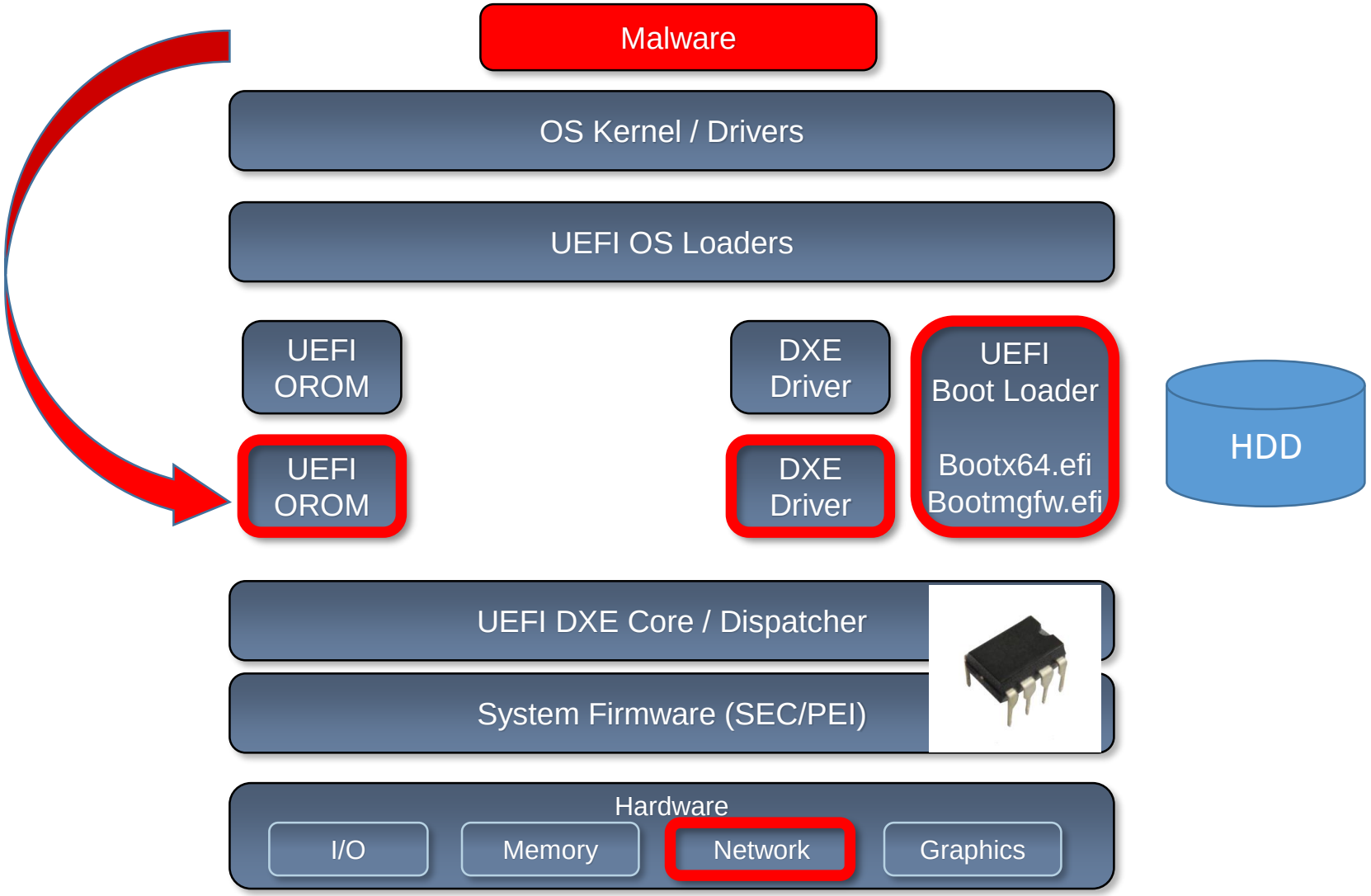

UEFI Bootkits

Patching UEFI "Option ROM"

UEFI DXE Driver in Add-On Card (Network, Storage..)

Non-Embedded in FV in ROM

Mac EFI Rootkits by @snare, Black Hat USA 2012

UEFI Bootkits

Replacing OS Loaders (winload.efi, winresume.efi)

Patching GUID Partition Table (GPT)

UEFI Bootkits

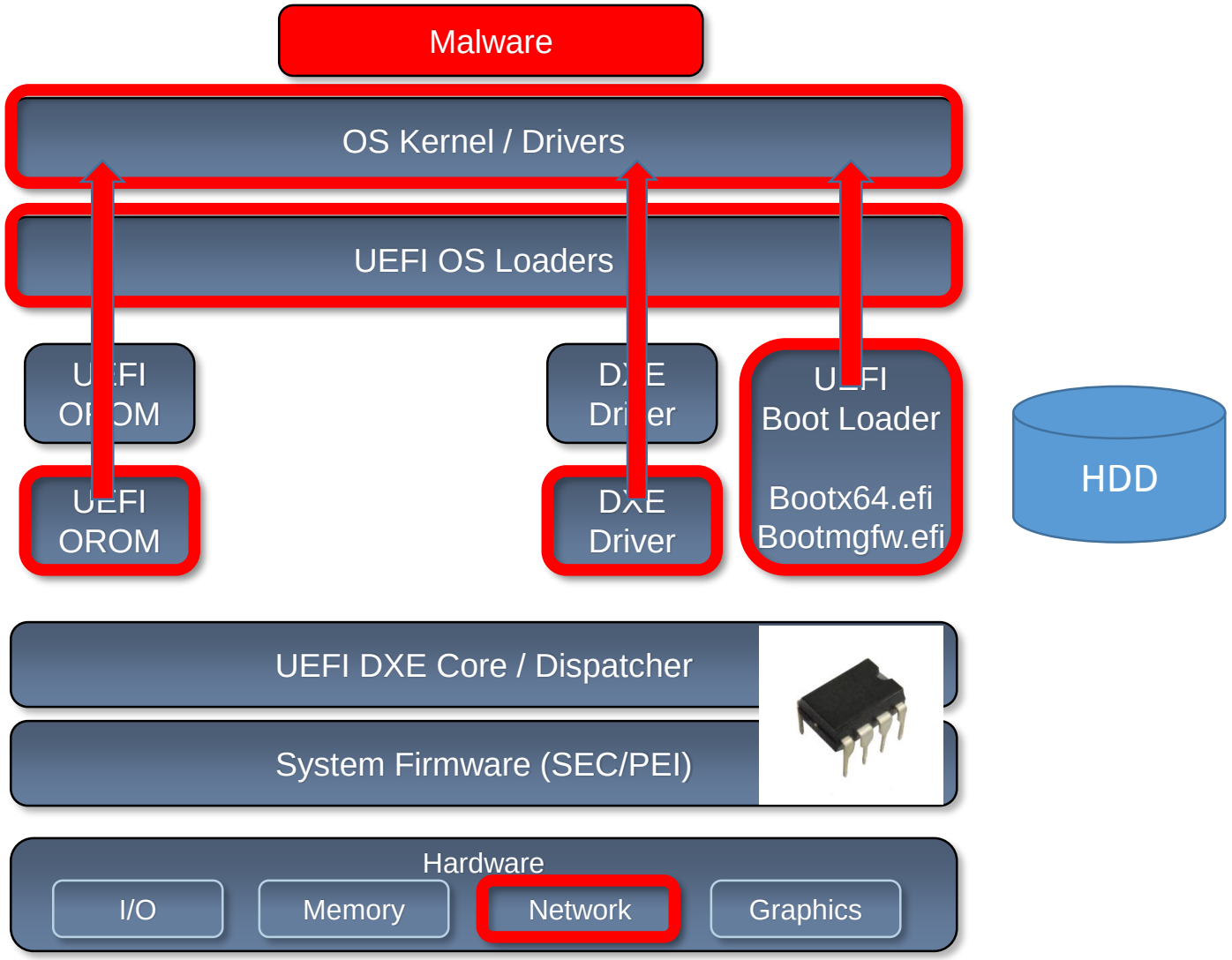

What about Secure Boot?

Secure Boot on MS Windows 8.1

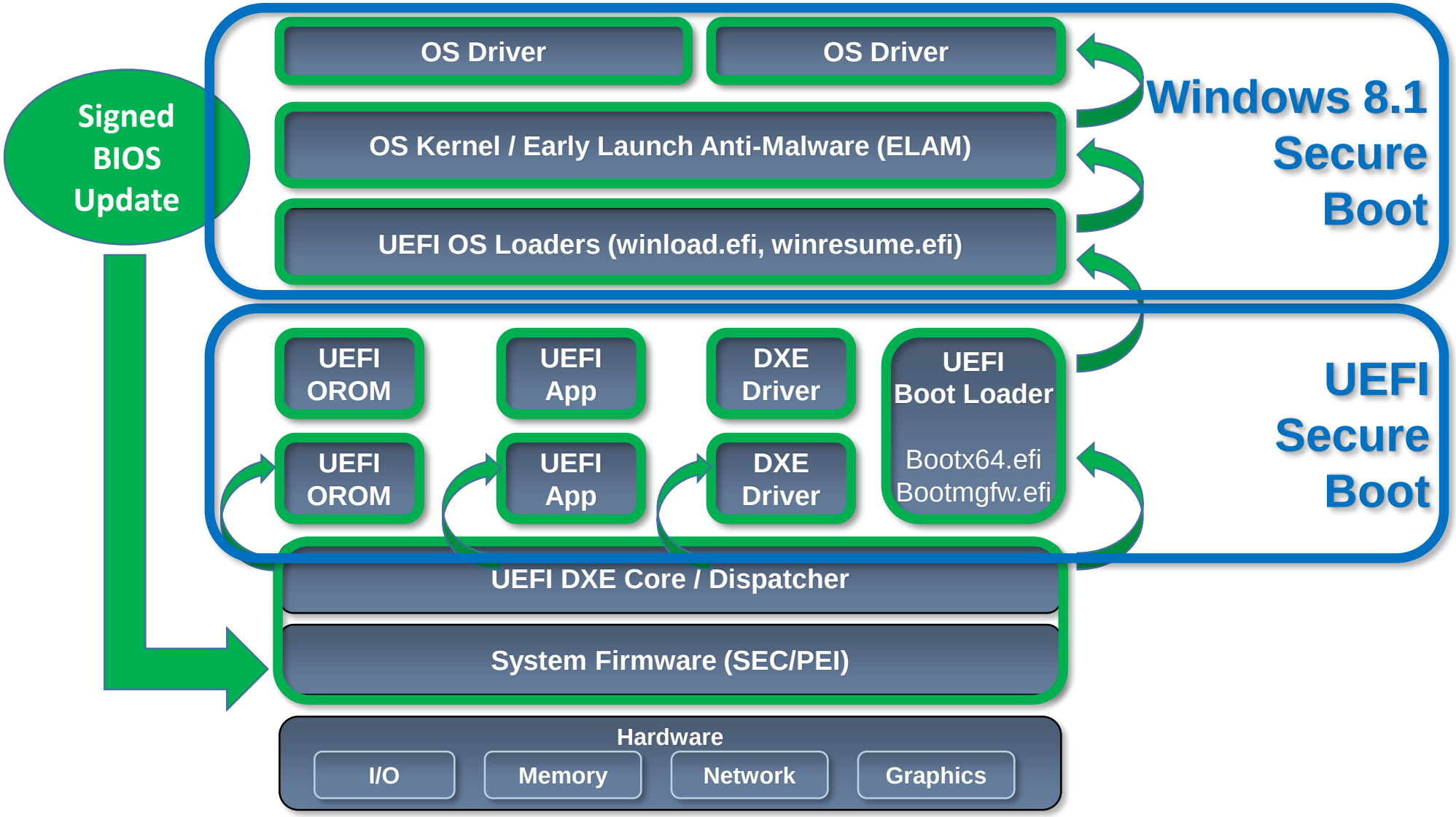

Secure Boot bypass possible?

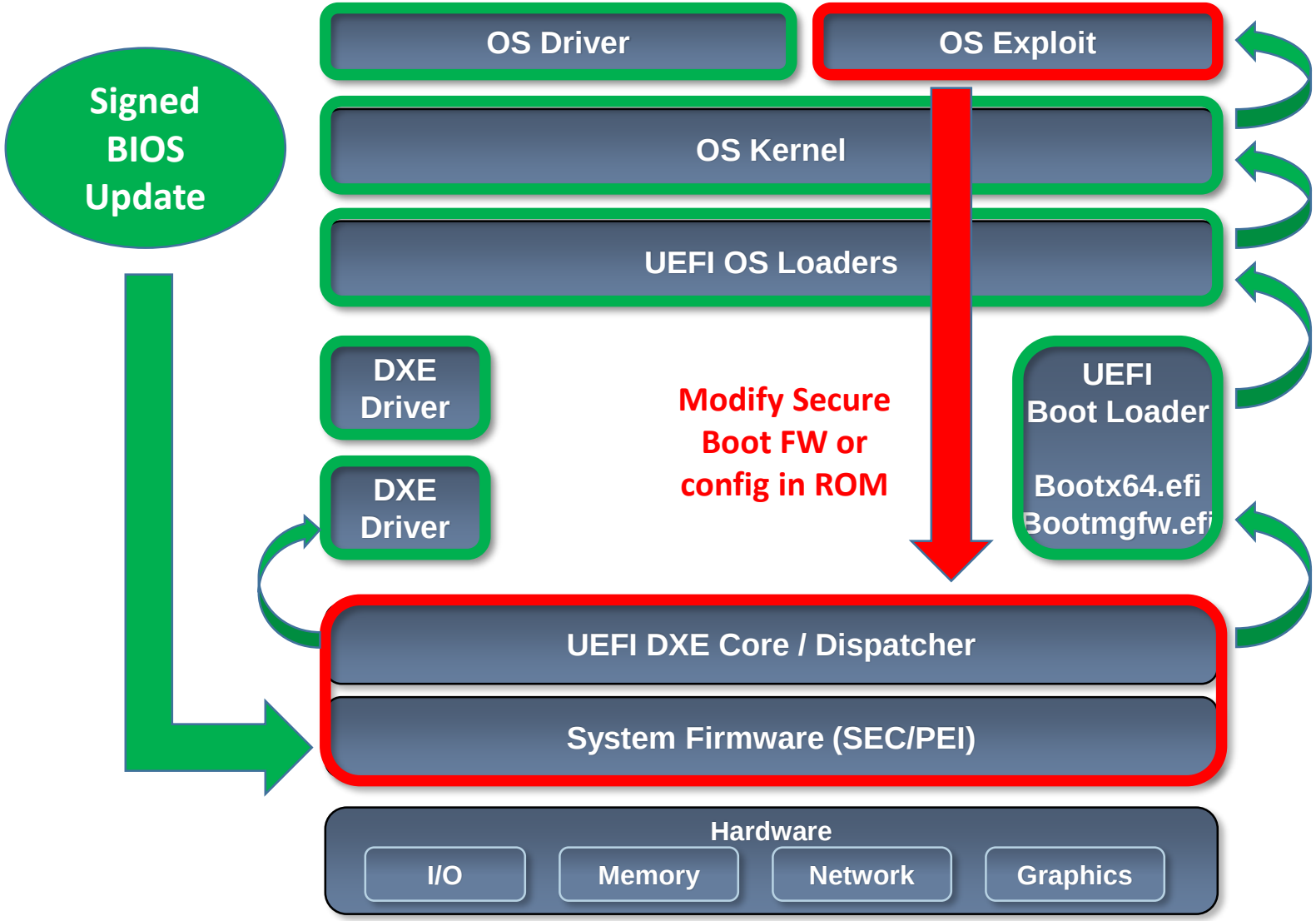

First Public Windows 8 Secure Boot Bypass (Aug 2013)

BIOS Exploit

```
[+] loaded exploits.bios.bh2013
[+] imported chipsec.modules.exploits.bios.bh2013
[*] BIOS Region: Base = 0x00200000, Limit = 0x007FFFFF

[*] Reading 0x80 bytes from BIOS region in ROM (address 0x20F000)..
ff ff ff ff ff ff ff ff ff ff ff ff ff ff ff ff |
ff ff ff ff ff ff ff ff ff ff ff ff ff ff ff ff |
ff ff ff ff ff ff ff ff ff ff ff ff ff ff ff ff |
ff ff ff ff ff ff ff ff ff ff ff ff ff ff ff ff |
ff ff ff ff ff ff ff ff ff ff ff ff ff ff ff ff |
ff ff ff ff ff ff ff ff ff ff ff ff ff ff ff ff |
ff ff ff ff ff ff ff ff ff ff ff ff ff ff ff ff |
ff ff ff ff ff ff ff ff ff ff ff ff ff ff ff ff |

[+] Checking protection of UEFI BIOS region in ROM..
[spi] UEFI BIOS write protection enabled but not locked. Disabling..
[!] UEFI BIOS write protection is disabled
[*] Writing payload to BIOS region (address 0x20F000)..

[*] Reading BIOS back (address 0x20F000)..
20 20 49 4e 20 59 4f 55 52 20 42 49 4f 53 20 20 |   IN YOUR BIOS
20 20 20 20 20 20 20 20 20 20 20 20 20 20 20 20 |
20 20 44 4f 4e 27 54 20 57 4f 52 52 59 21 20 20 |   DON'T WORRY!
59 4f 55 52 20 4f 53 20 42 4f 4f 54 20 48 41 53 | YOUR OS BOOT HAS
20 20 42 45 45 4e 20 53 45 43 55 52 45 44 20 20 |   BEEN SECURED
20 20 20 20 20 20 20 20 20 20 20 20 20 20 20 20 |
20 42 4c 41 43 4b 20 48 41 54 20 32 30 31 33 20 |  BLACK HAT 2013
ff ff ff ff ff ff ff ff ff ff ff ff ff ff ff ff |
```

A Tale Of One Software Bypass Of Windows 8 Secure Boot

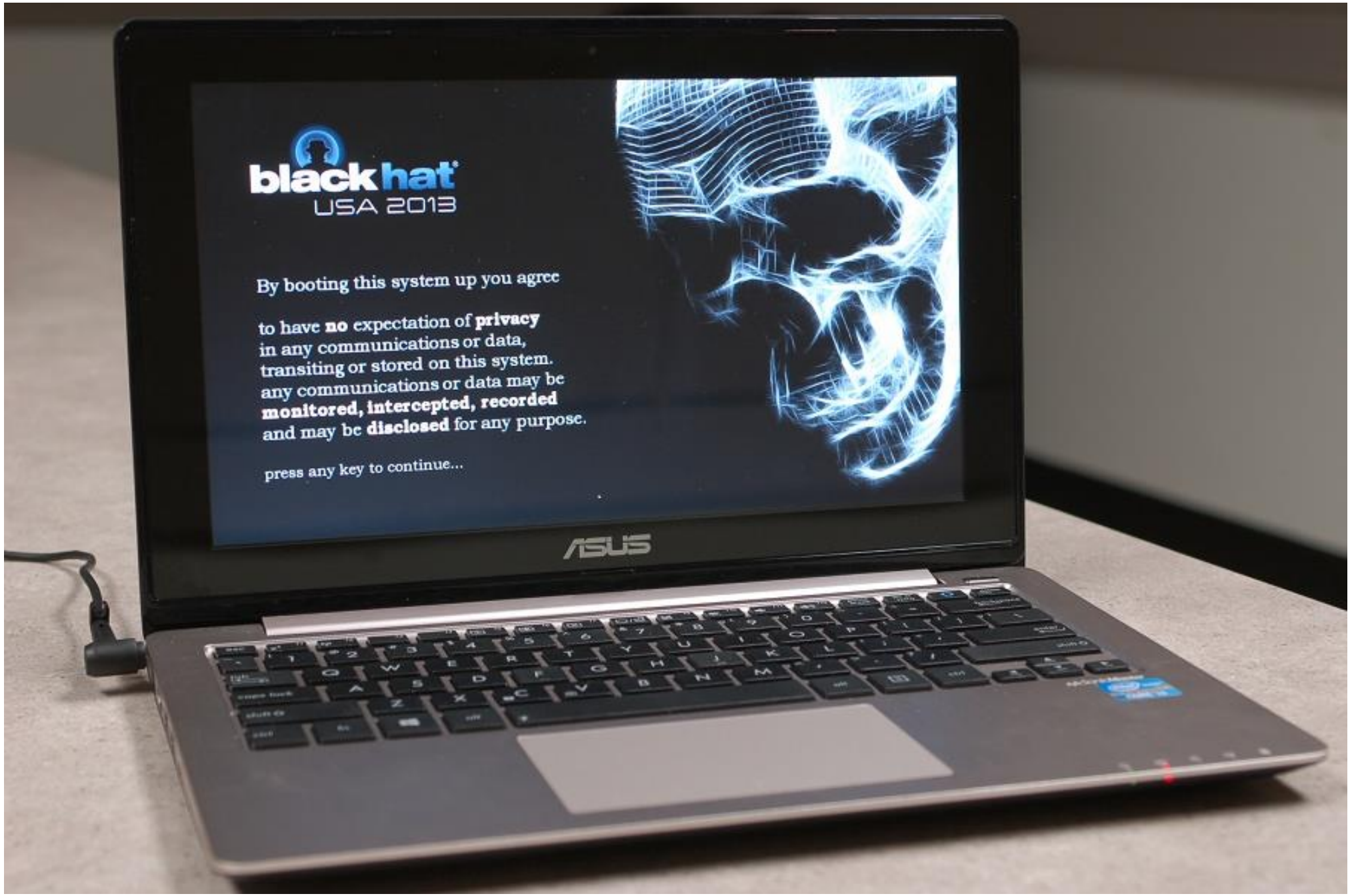
black hat
USA 2013
By booting this system up you agree
to have no expectation of privacy
in any communications or data,
transiting or stored on this system.
any communications or data may be
monitored, intercepted, recorded
and may be disclosed for any purpose.
press any key to continue...
ASUS

BIOS Attack Surface

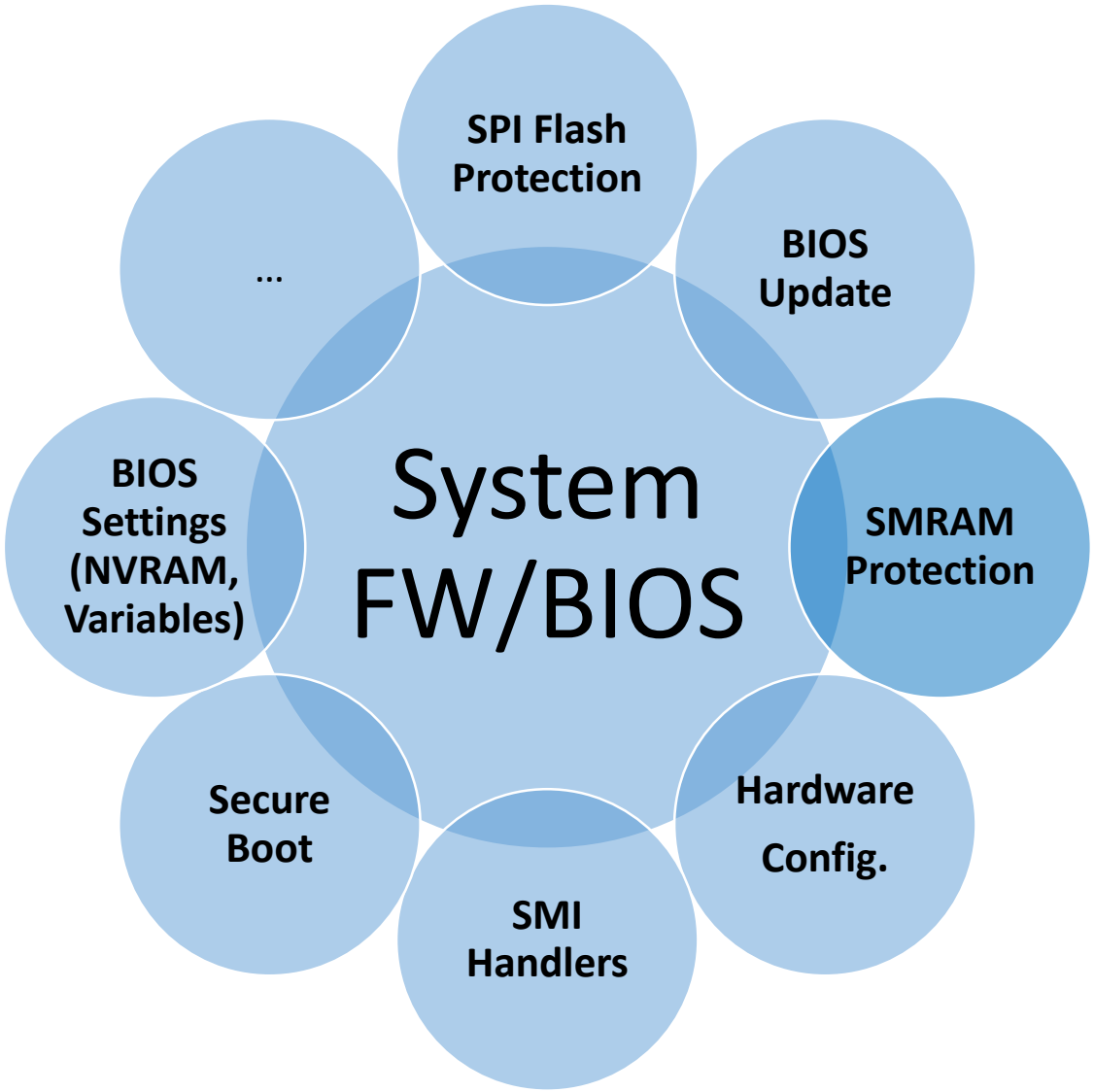

Summary of Attacks Against BIOS and Secure Boot


Virus Warning : Disabled
CPU L1 Cache : Enabled
CPU L2 Cache : Enabled
CPU L2 Cache ECC Checking : Enabled
Quick Power On Self Test : Enabled
Boot Sequence : A,C,SCSI
Swap Floppy Drive : Disabled
Boot Up Floppy Seek : Disabled
Boot Up NumLock Status : On
Typematic Rate Setting : Enabled
Typematic Rate (Chars/Sec) : 30
Typematic Delay (Msec) : 250
Security Option : Setup
PCI/VGA Palette Snoop : Disabled
OS Select For DRAM > 64MB : Non-OS2
HDD S.M.A.R.T. Capability : Disabled
ESC : Quit
F1 : Help
F5 : Old Values
F6 : Load Fail-Safe Settings
F7 : Load Optimal Settings

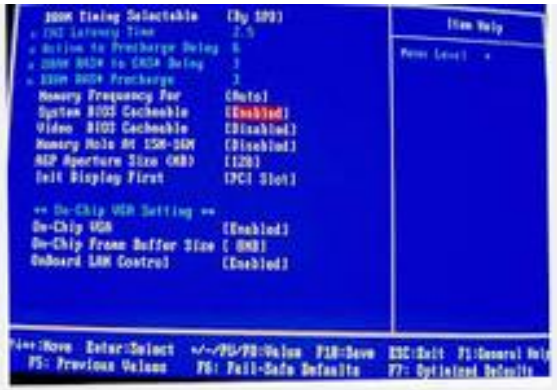
Item Help
Memory Frequency For (Auto)
System BIOS Cacheable [Enabled]
Video BIOS Cacheable [Disabled]
Memory Hole At 15M-16M [Disabled]
AGP Aperture Size (MB) [128]
Init Display First [PCI Slot]
On-Chip VGA [Enabled]
On-Chip Frame Buffer Size [8MB]
Onboard LAN Control [Enabled]


> Standard CMOS Features
> Advanced BIOS Features
> Advanced Chipset Features
> Integrated Peripherals
> Power Management Setup
> PnP/PCI Configurations
> PC Health Status
Frequency/Voltage Control
Load Fail-Safe Defaults
Load Optimized Defaults
Set Supervisor Password
Set User Password
Save & Exit Setup
Exit Without Saving
Esc : Quit
F10 : Save & Exit Setup
Virus Protection, Boot Sequence...


Phoenix-BIOS Setup Utility
Main Advanced Security Boot Exit
Item Specific Help
System Time:
System Date:
Legacy Diskette A:
Legacy Diskette B:
Primary Master
Primary Slave
Secondary Master
Secondary Slave
Keyboard Features
System Memory:
Extended Memory:
Boot-time Diagnostic Screen:


Phoenix - Award WorkstationBIOS CMOS Setup Utility
Advanced Chipset Features
DRAM Clock/Timing Control
AGP & P2P Bridge Control
Prefetch Caching
System BIOS Cacheable
VIDEO RAM Cacheable
Memory Hole at 15M-16M
Item Help
Menu Level


BIOS SETUP UTILITY
Main Advanced Power Boot Exit
Setup Warning
Setting items on this menu to incorrect values may cause your system to malfunction.
Primary Video Adapter
Onboard Video Memory Size
PS/2 Mouse
Onboard IDE/SATA Adapters
Onboard IDE/SATA Configuration
USB Legacy Mode Support
Onboard LAN
Onboard LAN Boot ROM
Onboard 1394
Onboard Audio


OVERCLOCKED


Phoenix-BIOS Setup Utility
Main Advanced Security Power Boot Exit
Item Specific Help
Set User Password
Set Supervisor Password
Supervisor Password controls access to the setup utility.


AwardBIOS Setup Utility
Advanced
I/O Device Configuration
Item Specific Help
Onboard AC97 Modem Controller [Disabled]
Onboard AC97 Audio Controller [Auto]
Onboard FDC Swap A & B [No Swap]
Floppy Disk Access Control
Disabled
Auto
Onboard Serial Port 1
Onboard Serial Port 2
UART2 Use Standard Infrared
Onboard Parallel Port [378H/IRQ7]
Parallel Port Mode [ECP+EPP]
ECP DMA Select [3]
Onboard Game Port [200H-207H]
<Enter> to select.

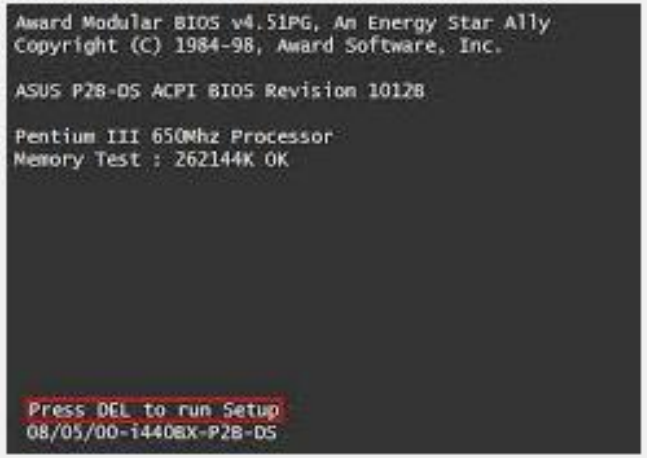
Award Modular BIOS v4.51PG, An Energy Star Ally
Copyright (C) 1984-98, Award Software, Inc.
ASUS P2B-DS ACPI BIOS Revision 1012B
Pentium III 650Mhz Processor
Memory Test : 262144K OK
Press DEL to run Setup
08/05/00-i440BX-P2B-DS

Subzero Security Patching

"1-days from Hell… get it?"

```
141c142,144
<   if ( sub_FFC40CE8(0x60u) != -1 || sub_FFC40CE8(0x64u) != -1 )
---
>   sub_FFC40D21(0xCF8u, 0x8000F8DC);
>   sub_FFC40D0F(0xCFCu, 2u);
>   if ( sub_FFC40D08(0x60u) != -1 || sub_FFC40D08(0x64u) != -1 )
```

From [Analytics, and Scalability, and UEFI Exploitation]() by Teddy Reed

Patch attempts to enable BIOS write protection (sets BIOS_CONTROL[BLE]). Picked up by [Subzero]()

CHIPSEC
Platform Security Assessment Framework

https://github.com/chipsec/chipsec
@CHIPSEC

CHIPSEC: Platform Security Assessment Framework

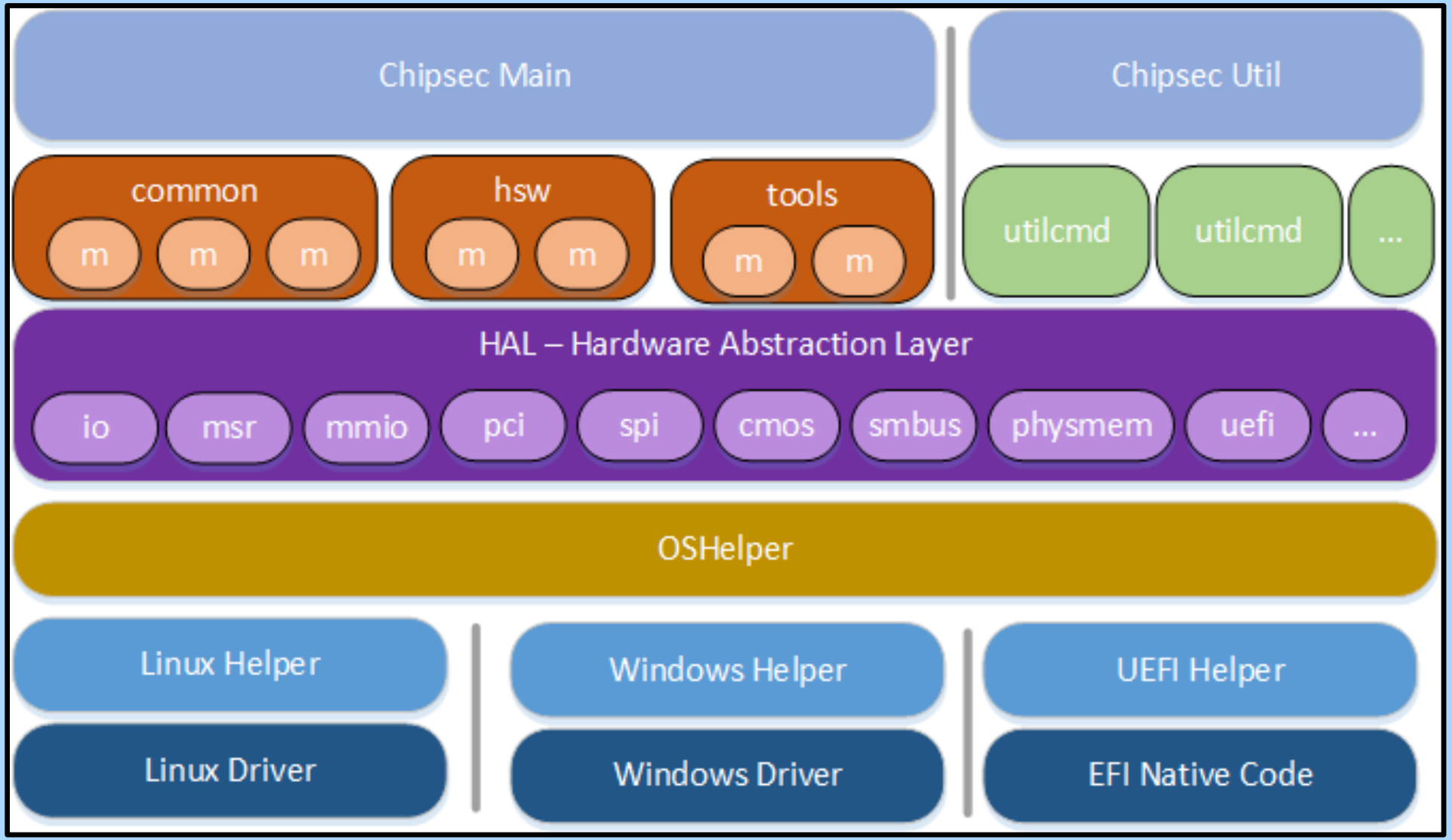

CHIPSEC: Platform Security Assessment Framework

`chipsec_main.py`	runs modules (see modules dir below)
`chipsec_util.py`	runs manual utilities (see utilcmd dir below)
`/chipsec`	
`/cfg`	platform specific configuration
`/hal`	all the HW stuff you can interact with
`/helper`	support for OS/environments
`/modules`	modules (tests/tools/PoCs) go here
`/utilcmd`	utility commands for chipsec_util

Known Threats and CHIPSEC modules

Issue	CHIPSEC Module	References
SMRAM Locking	**common.smm**	CanSecWest 2006
BIOS Keyboard Buffer Sanitization	**common.bios_kbrd_buffer**	DEFCON 16 2008
SMRR Configuration	**common.smrr**	ITL 2009 CanSecWest 2009
BIOS Protection	**common.bios_wp**	BlackHat USA 2009 CanSecWest 2013 Black Hat 2013 NoSuchCon 2013 Flashrom
SPI Controller Locking	**common.spi_lock**	Flashrom Copernicus
BIOS Interface Locking	**common.bios_ts**	PoC 2007
Access Control for Secure Boot Keys	**common.secureboot.keys**	UEFI 2.4 Spec
Access Control for Secure Boot Variables	**common.secureboot.variables**	UEFI 2.4 Spec

BIOS/Firmware Forensics

Live system firmware analysis

```
chipsec_util spi info
chipsec_util spi dump rom.bin
chipsec_util spi read 0x700000 0x100000 bios.bin
chipsec_util uefi var-list
chipsec_util uefi var-read db
    D719B2CB-3D3A-4596-A3BC-DAD00E67656F db.bin
```

Offline system firmware analysis

```
chipsec_util uefi keys PK.bin
chipsec_util uefi nvram vss bios.bin
chipsec_util uefi decode rom.bin
chipsec_util decode rom.bin
```

How to dump BIOS firmware directly from chip?

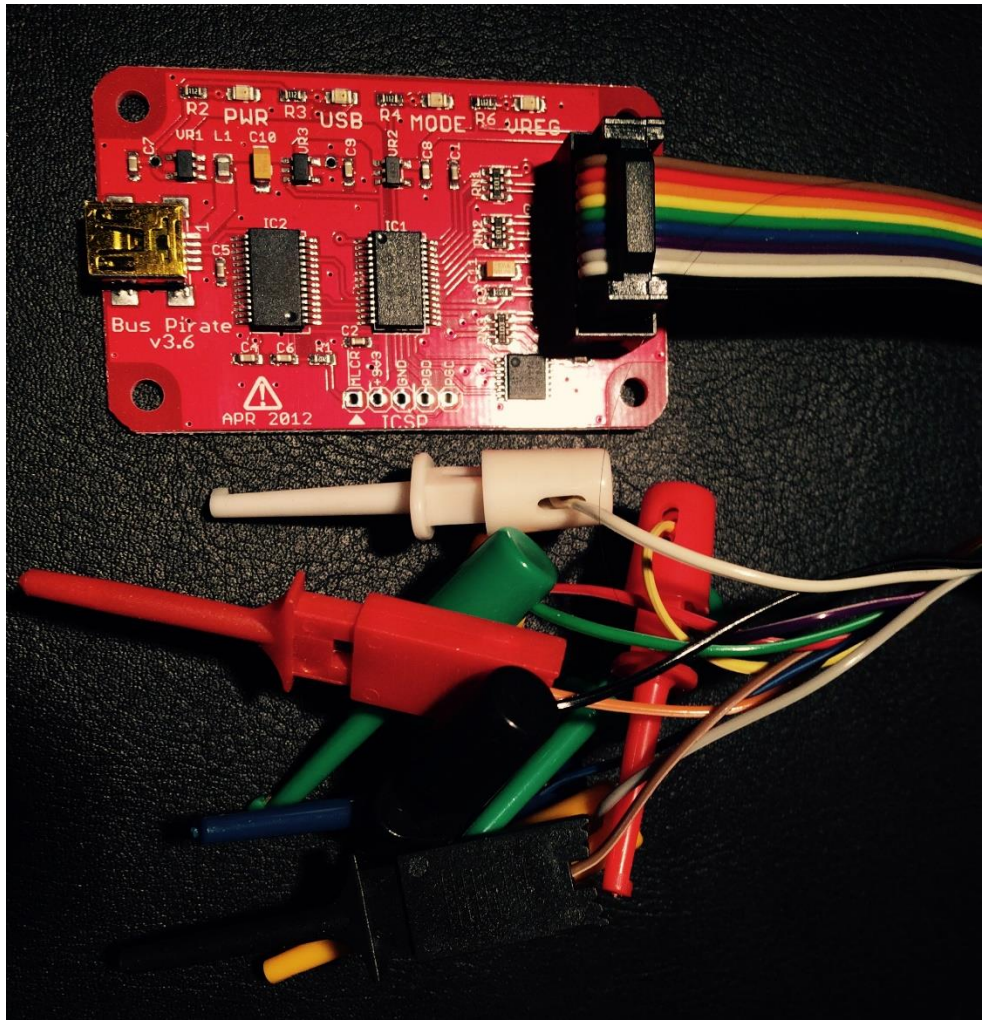

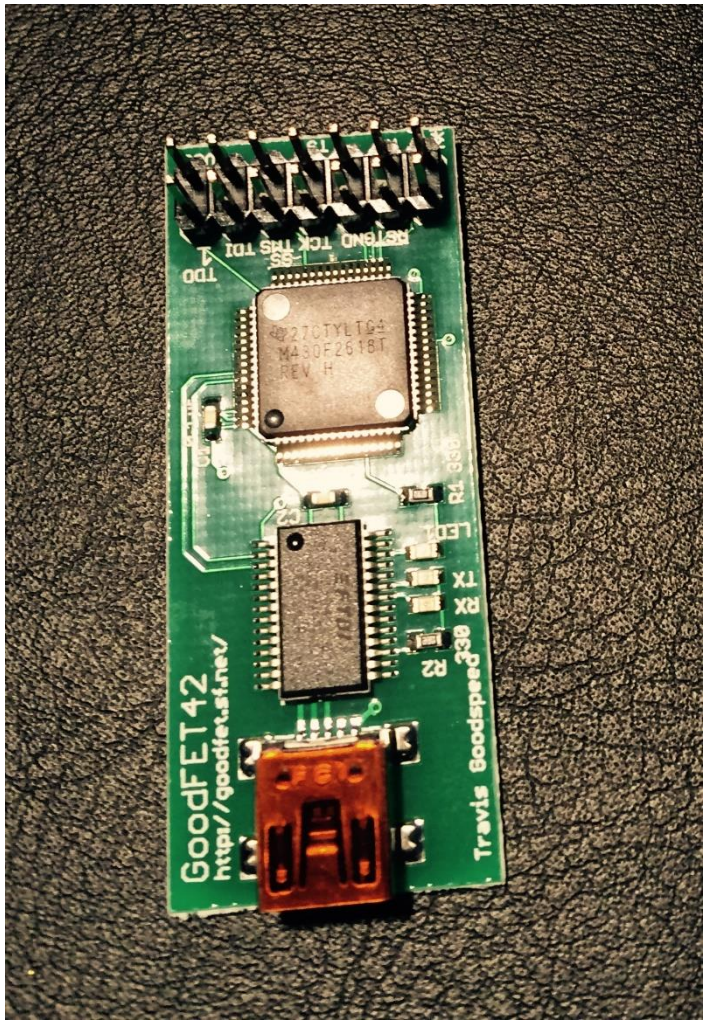

How to dump BIOS firmware directly from chip?

DEMO TIME

Advanced Malware Analysis

Book is coming in 2015!

Stay Tuned ;)

Thank you for your attention!

Alexander Matrosov
@matrosov

Eugene Rodionov
@vxradius

David Harley
@DavidHarleyBlog

vb 2014
SEATTLE
24 - 26 September 2014